Structherm Ltd
Bent Ley Road
Meltham
Holmfirth
West Yorkshire HD9 4AP
Tel: 01484 850098 Fax: 01484 851388
e-mail: info@structherm.co.uk
website: www.structherm.co.uk

BBA APPROVAL INSPECTION TESTING CERTIFICATION
TECHNICAL APPROVALS FOR CONSTRUCTION

Agrément Certificate
96/3243
Product Sheet 4

STRUCTHERM EXTERNAL WALL INSULATION SYSTEMS

STRUCTHERM THERMAPHON NSC2 EXTERNAL WALL INSULATION SYSTEM

This Agrément Certificate Product Sheet(1) relates to the Structherm Thermaphon NSC2 External Wall Insulation System, comprising mechanically fixed phenolic, enhanced expanded polystyrene (EPS) or polyisocyanurate (PIR) insulation boards (with supplementary adhesive when using phenolic insulation), with a reinforced basecoat and either render or acrylic brick slip finishes. The system is suitable for use, with height restrictions, on new or existing domestic and non-domestic buildings

(1) Hereinafter referred to as 'Certificate'.

CERTIFICATION INCLUDES:

- factors relating to compliance with Building Regulations where applicable
- factors relating to additional non-regulatory information where applicable
- independently verified technical specification
- assessment criteria and technical investigations
- design considerations
- installation guidance
- regular surveillance of production
- formal three-yearly review.

KEY FACTORS ASSESSED

Thermal performance — the system can be used to improve the thermal performance of external walls and can contribute to meeting the requirements of the national Building Regulations (see section 6).

Strength and stability — the system can adequately resist wind loads and impact damage (see section 7).

Behaviour in relation to fire — the system has a B-s1, d0 reaction to fire classification in accordance with BS EN 13501-1 : 2007. For height restrictions, see section 8.

Risk of condensation — the system can contribute to limiting the risk of interstitial and surface condensation (see section 11).

Durability — when installed and maintained in accordance with the Certificate holder's recommendations and the terms of this Certificate, the system should remain effective for at least 30-years (see section 13).

The BBA has awarded this Certificate to the company named above for the system described herein. This system has been assessed by the BBA as being fit for its intended use provided it is installed, used and maintained as set out in this Certificate.

On behalf of the British Board of Agrément

Date of Second issue: 10 October 2014

John Albon — Head of Approvals
Energy and Ventilation

Claire Curtis-Thomas
Chief Executive

Originally certificated on 13 May 2013
Certificate amended on 6 November 2019 to update fire regulations, and height restrictions where relevant.
Certificate amended on 13 October 2020 to amend sections 4 and 7.

The BBA is a UKAS accredited certification body – Number 113.
The schedule of the current scope of accreditation for product certification is available in pdf format via the UKAS link on the BBA website at www.bbacerts.co.uk
Readers MUST check the validity and latest issue number of this Agrément Certificate by either referring to the BBA website or contacting the BBA directly.
Any photographs are for illustrative purposes only, do not constitute advice and should not be relied upon.

British Board of Agrément
Bucknalls Lane
Watford
Herts WD25 9BA
tel: 01923 665300
e-mail: clientservices@bbacerts.co.uk
website: www.bbacerts.co.uk
©2014

Regulations

In the opinion of the BBA, Structherm Thermaphon NSC2 External Wall Insulation Systems, if installed, used and maintained in accordance with this Certificate, will satisfy or contribute to satisfying the relevant requirements of the following Building Regulations (the presence of a UK map indicates that the subject is related to the Building Regulations in the region or regions of the UK depicted):

The Building Regulations 2010 (England and Wales) (as amended)

Requirement:	**A1**	**Loading**
Comment:		The system can sustain and transmit wind loads to the substrate wall. See sections 7.1 to 7.13 of this Certificate.
Requirement:	**B4(1)**	**External fire spread**
Comment:		The system is restricted by this Requirement. See sections 8.1 to 8.6 of this Certificate.
Requirement:	**C2(b)**	**Resistance to moisture**
Comment:		The system provides a degree of protection against rain ingress. See section 10.1 of this Certificate.
Requirement:	**C2(c)**	**Resistance to moisture**
Comment:		The system can contribute to minimising the risk of interstitial and surface condensation. See sections 11.1, 11.2 and 11.4 of this Certificate.
Requirement:	**L1(a)(i)**	**Conservation of fuel and power**
Comment:		The system can contribute to satisfying this Requirement. See sections 6.2 and 6.3 of this Certificate.
Regulation:	**7**	**Materials and workmanship (applicable to Wales only)**
Regulation:	**7(1)**	**Materials and workmanship (applicable to England only)**
Comment:		The system is acceptable. See section 13.1 and the *Installation* part of this Certificate.
Regulation:	**7(2)**	**Materials and workmanship (applicable to England only)**
Comment:		The system is restricted by this Regulation. See sections 8.1 to 8.6 of this Certificate.
Regulation:	**26**	**CO_2 emission rates for new buildings**
Regulation:	**26A**	**Fabric energy efficiency rates for new dwellings (applicable to England only)**
Regulation:	**26A**	**Primary energy consumption rates for new buildings (applicable to Wales only)**
Regulation:	**26B**	**Fabric performance values for new dwellings (applicable to Wales only)**
Comment:		The system can contribute to satisfying these Regulations although appropriate compensating fabric/service measures may need to be taken. See section 6.2 and 6.3 of this Certificate.

The Building (Scotland) Regulations 2004 (as amended)

Regulation:	**8(1)(2)**	**Durability, workmanship and fitness of materials**
Comment:		The system can contribute to a construction satisfying this Regulation. See sections 12 and 13.1 and the *Installation* part of this Certificate.
Regulation:	**9**	**Building standards applicable to construction**
Standard:	1.1	Structure
Comment:		The system can sustain and transmit wind loads to the substrate wall. See sections 7.1 to 7.13 of this Certificate.
Standard:	2.6	Spread to neighbouring buildings
Comment:		The system is restricted by this Standard, with reference to clauses 2.6.4(1)(2), 2.6.5(1) and 2.6.6(2). See sections 8.1 to 8.4, 8.7 and 8.8 of this Certificate.
Standard:	2.7	Spread on external walls
Comment:		The system is restricted by this Standard, with reference to clause 2.7.1(1)(2). See sections 8.1to 8.4, 8.7 and 8.8 of this Certificate.
Standard:	3.10	Precipitation
Comment:		The system can contribute to a construction satisfying this Standard, with reference to cause 3.10.1(1)(2) and 3.10.2(1)(2). See section 10.1 of this Certificate.
Standard:	3.15	Condensation
Comment:		The system can contribute to satisfying this Standard, with reference to clauses 3.15.1(1)(2), 3.15.4(1)(2) and 3.15.5(1)(2). See sections 11.3 and 11.4 of this Certificate.
Standard:	6.1(b)	Carbon dioxide emissions
Standard:	6.2	Building insulation envelope
Comment:		The system can contribute to satisfy these Standards, with reference to clauses (or parts of) 6.1.1(1), 6.1.2(1)(2), 6.1.3(1)(2), 6.1.6(1), 6.1.10(2), 6.2.1(1)(2), 6.2.3(1), 6.2.4(2), 6.2.5(2), 6.2.6(1), 6.2.7(1), 6.2.8(2), 6.2.9(1)(2), 6.2.10(1), 6.2.11(1), 6.2.12(2) and 6.2.13(1)(2). See sections 6.2 and 6.3 of this Certificate.
Standard:	7.1(a)(b)	Statement of sustainability
Comment:		The system can contribute to satisfying the relevant requirements of Regulation 9, Standards 1 to 6, and therefore will contribute to a construction meeting the bronze level of sustainability as defined in this Standard. In addition, the system can contribute to a construction meeting a higher level of sustainability as defined in this Standard with reference to clauses 7.1.4(1)(2) [Aspect 1(1)(2) and 2(1)], 7.1.6(1)(2) [Aspect 1(1)(2) and 2(1)] and 7.1.7(1)(2) [Aspect 1(1)(2)]. See section 6.2 of this Certificate.
Regulation:	**12**	**Building standards applicable to conversions**
Comment		All comments given for the system under Regulation 9, Standards 1 to 6, also apply to this Regulation, with reference to clause 0.12.1(1)(2) and Schedule 6(1)(2).

(1) Technical Handbook (Domestic).
(2) Technical Handbook (Non-Domestic).

The Building Regulations (Northern Ireland) 2012

Regulation:	23	Fitness of materials and workmanship
Comment:		The system is acceptable. See section 13.1 and the *Installation* part of this Certificate.
Regulation:	28(b)	Resistance to moisture and weather
Comment:		The system provides a degree of protection against rain ingress. See section 10.1 of this Certificate.
Regulation:	29	Condensation
Comment:		The system can contribute to minimising the risk of interstitial condensation. See section 11.4 of this Certificate.
Regulation:	30	Stability
Comment:		The system can sustain and transmit wind loads to the substrate wall. See sections 7.1 to 7.13 of this Certificate.
Regulation:	36(a)	External fire spread
Comment:		The system is restricted by this Regulation. See sections 8.1 to 8.6 of this Certificate.
Regulation:	39(a)(i)	Conservation measures
Regulation:	40	Target carbon dioxide emission rate
Comment:		The system can contribute to satisfying these Regulations. See sections 6.2 and 6.3 of this Certificate.

Construction (Design and Management) Regulations 2007

Construction (Design and Management) Regulations (Northern Ireland) 2007

Information in this Certificate may assist the client, CDM co-ordinator, designer and contractors to address their obligations under these Regulations.

See section: 3 *Delivery and site handling* (3.2 and 3.4) of this Certificate.

Additional Information

NHBC Standards 2014

NHBC accepts the use of Structherm Thermaphon NSC2 External Wall Insulation System, provided it is installed, used and maintained in accordance with this Certificate, in relation to *NHBC Standards*, Chapter 6.9 *Curtain walling and Cladding*.

Technical Specification

1 Description

1.1 The Structherm Thermaphon NSC2 External Wall Insulation System (see Figure 1) comprises, from inside to outside:

Supplementary Adhesive (for use with phenolic insulation only)

- Structherm High Polymer Adhesive — a cement-based, polymer-modified adhesive with added fibres. Supplied in powder form.

Insulation

- enhanced expanded polystyrene (grey) insulation boards — 1200 mm by 600 mm in a range of thicknesses between 50 mm and 200 mm, with a nominal density of 15 kg·m^{-3}, a minimum compressive strength of 70 kPa and a nominal tensile strength perpendicular to the face of 100 kPa. Boards are manufactured to comply with the requirements for type FRA (flame retardant additive) material to BS 13163 : 2012
- polyisocyanurate (PIR) insulation boards — 1200 mm by 600 mm in a range of thicknesses between 20 mm and 200 mm, with a nominal density of 40 kg·m^{-3}, a minimum compressive strength of 150 kN·m^{-2} and tensile strength perpendicular to the face of 80 kPa. Boards are manufactured so as to comply with the requirements of BS EN 13165 : 2012
- phenolic insulation boards — 1200 mm by 600 mm in a range of thicknesses between 15 mm and 200 mm, with a nominal density of 40 kg·m^{-3}, a minimum compressive strength of 150 kN·m^{-2} and tensile strength perpendicular to the face of 50 kPa. Boards are manufactured so as to comply with the requirements of BS EN 13166 : 2012.

Mechanical fixings

- mechanical fixings[1][2] — anchors with adequate length to suit the substrate and the insulation thickness, approved and supplied by the Certificate holder, and selected from:
  - — Ejotherm NT U — high-density polyethylene (HDPE) anchor sleeve with galvanized steel centre pin
  - — Ejotherm STR U — HDPE anchor sleeve and polystyrene anchor cap with galvanized steel centre pin

(1) Other fixings may be used provided they can be demonstrated to have equal or higher pull-out, plate diameter and plate stiffness characteristics. When dry-fixed (no supplementary adhesive) is used, only fixings with metal pins may be specified.

(2) The fixings must be surface mounted only.

Basecoat

- Structherm High Polymer Thin Render Basecoat — a cement-based, polymer-modified basecoat with added fibres. Supplied in powder form.

Reinforcement

- reinforcement mesh — a one metre wide mesh of alkali-resistant glassfibre, weighing approximately 160 g·m^{-2}, with a mesh size of 4 mm by 4 mm.

Primer

- Structherm Silicone Primer — a water-based single-component, primer, supplied in liquid form, for use with Structherm Silicone Decorative Finish
- Acrylic Brick-slips Primer — a water-based single-component, primer, supplied in liquid form, for use with Structherm Acrylic Brick-slips.

Brick-slip adhesive

- Acrylic Brick-slip Adhesive — a water-based cement-free adhesive which is pre-mixed for use with acrylic brick-slips.

Finishes to be used with all insulation types

- Structherm Silicone Decorative Render — a polymer-modified, silicone coating system, produced in paste form and available in a range of colours
- Structherm Dash Receiver — a polymer-modified cement binder system supplied in powder form. To be used with spar aggregates.

Aggregates

- Structherm Spar-Dash Aggregates — available in 5 mm to 8 mm aggregate sizes and various colours.

Finishes to be used only with enhanced EPS insulation

- Structherm Brick-effect Render — a polymer-modified cement binder two layer system containing fillers, produced in powder form
- Structherm Acrylic Brick-slips — poly-acrylic slips containing quartz sands fillers. Standard sizes of 50 mm by 210 mm by 4 mm, 65 mm by 215 mm by 4 mm and 71 mm by 240 mm by 4 mm, with a nominal weight of 6 g·m^{-2}. Available as straight brick-slips and corner brick-slips and in a range of colours.

Figure 1 Structherm Thermaphon NSC2 External Wall Insulation System

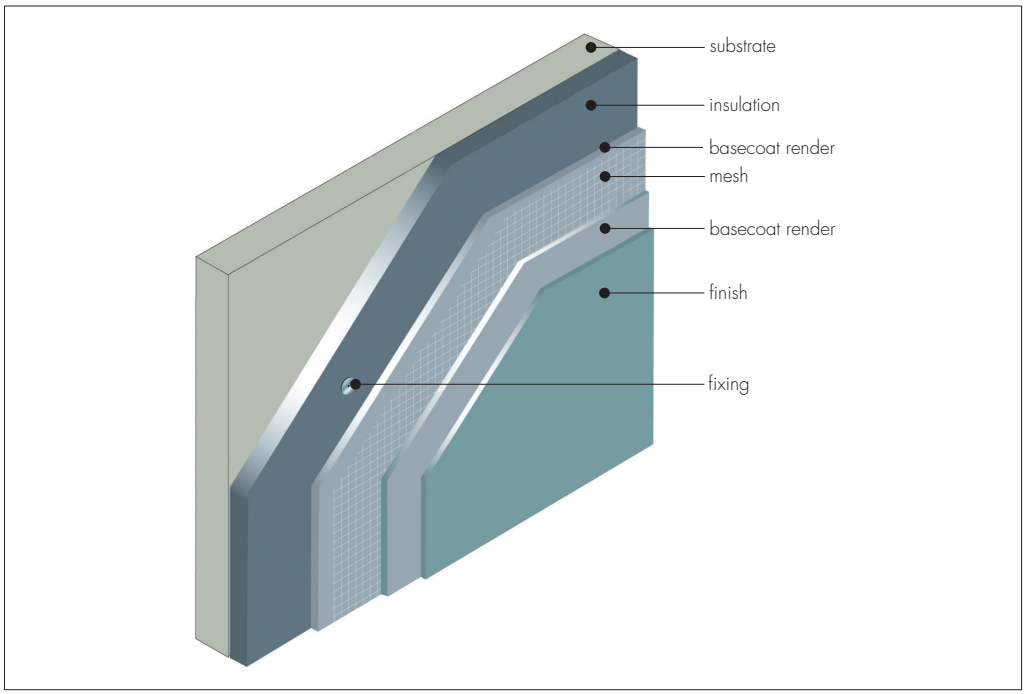

1.2 Ancillary materials also used with the system but outside the scope of this Certificate:

- profiles — a range of standard profiles for wall base, end stop, corner mesh and expansion joints. Profiles are available in organic polyester powder-coated galvanized steel or stainless steel
- under and oversills
- expansion joint beads
- pipe and parapet capping and flashing sections
- connection plates
- profile fixings — torque drive or resin anchors
- sealant — silicone sealant.

1.3 The insulation boards are mechanically fixed to the external surface of the substrate (with 40% supplementary adhesive when using phenolic insulation). Basecoat render is trowel-applied to the board face to an approximate thickness of 3 mm, the reinforcing mesh is applied and embedded immediately, and then a further layer of basecoat render is applied to give a total thickness of approximately 6 mm. When dry, the surface is primed prior to the application of the selected render finish or acrylic brick-slip adhesive, followed by the render finish or acrylic brick-slips.

2 Manufacture

As part of the assessment and ongoing surveillance of product quality, the BBA has:

- agreed with the manufacturer the quality control procedures and product testing to be undertaken
- assessed and agreed the quality control operated over batches of incoming materials
- monitored the production process and verified that it is in accordance with the documented process
- evaluated the process for management of nonconformities
- checked that equipment has been properly tested and calibrated
- undertaken to carry out the above measures on a regular basis through a surveillance process, to verify that the specifications and quality control operated by the manufacturer are being maintained.

3 Delivery and site handling

3.1 The insulation is delivered to site, shrink-wrapped in polythene packs bearing the manufacturer's and product logo and batch numbers.

3.2 Components are delivered to site in the quantities and packages listed in Table 1. Each package carries the manufacturer's and product logo and batch number.

Table 1 Component supply details

Component	Quantity and package
Structherm High Polymer Thin Basecoat Render	25 kg bag
Silicone Primer	25 kg tubs
Acrylic Brick-slip Primer	15 kg tub
Acrylic Brick-slip Adhesive	20 kg tub
Silicone Decorative Render	25 kg tubs
Structherm Brick-effect Render	25 kg bag
Structherm Dash Receiver	25 kg bag
Structherm Acrylic Brick-slips:	
straight	10 kg box
corner	3.5 kg box
Structherm High Polymer Adhesive	25 kg bag
Structherm Spar-dash Aggregate	25 kg bag
Reinforcement mesh	1 m x 50 m rolls
Mechanical fixings	boxed by manufacturer

3.3 The insulation boards should be stored on a firm, clean, level base, off the ground and under cover until required for use.

3.4 The insulation boards must be protected from prolonged exposure to sunlight either by storing opened packs under cover in dry conditions or re-covering with opaque polythene sheeting. Care must be taken when handling the insulation boards to avoid both damage and contact with solvents or materials containing volatile organic components. The boards must not be exposed to open flame or other ignition sources. Boards that become damaged, soiled or wet should be discarded.

3.5 The basecoat and render components should be stored in dry conditions, off the ground, and protected from frost at all times. Bags of unopened render will have a shelf-life of 12 months when stored correctly.

3.6 The Acrylic Brick-Slip Adhesive should be stored in temperatures not above 30 degrees and must be protected from exposure to sunlight. Tubs of unopened adhesive will have a shelf-life of 18 months when stored correctly.

Assessment and Technical Investigations

The following is a summary of the assessment and technical investigations carried out on Structherm Thermaphon NSC2 External Wall Insulation System.

Design Considerations

4 General

4.1 The Structherm Thermaphon NSC2 External Wall Insulation System, when installed in accordance with this Certificate, is satisfactory for use in reducing the thermal transmittance (U value) of external masonry or concrete walls

of new or existing buildings. It is essential that the detailing techniques specified in this Certificate are carried out to a high standard if the ingress of water into the insulation is to be avoided and the full thermal benefit obtained from treatment with the system (eg the insulation must be protected by an overhang, and window sills should be designed and installed so as to direct water away from the building).

4.2 For improved thermal/carbon-emissions performance of the structure, the designer should consider additional/alternative fabric and/or services measures.

4.3 The system is for application to the outside of external walls of masonry, normal weight concrete, lightweight concrete, autoclaved concrete and no-fines concrete construction, on new or existing domestic and non-domestic buildings (with or without existing render) with height restrictions (see section 8 of this Certificate). Prior to the installation of the system, wall surfaces should comply with section 14 of this Certificate.

4.4 New walls subject to national Building Regulations should be constructed in accordance with the relevant recommendations of:

- BS EN 1992-1-1 : 2004 and its UK National Annex
- BS EN 1996-1-1 : 2005 and its UK National Annex
- BS EN 1996-2 : 2006 and its UK National Annex
- BS 8000-0 : 2014
- BS 8000-2.2 : 1990
- BS 8000-3 : 2001.

4.5 New walls not subject to regulatory requirements should also be built in accordance with the Standards identified in section 4.4 of this Certificate.

4.6 Movement joints should be incorporated into the system in line with existing movement joints in the building structure and in accordance with the Certificate holder's recommendations for the specific installation.

4.7 The system will improve the weather resistance of a wall and provide a decorative finish. However, for existing buildings, it should only be installed where there are no signs of dampness on the inner surface of the wall other than those caused solely by condensation.

4.8 The effect of the system on the acoustic performance of a construction is outside the scope of this Certificate.

4.9 The fixing of sanitary pipework, plumbing, rainwater goods, satellite dishes, clothes lines, hanging baskets and similar items to the system is outside the scope of this Certificate (see section 4.10).

4.10 External pipework and ducts should be removed before installation, and alterations made to underground drainage to accommodate repositioning of the pipework to the finished face of the system. The Certificate holder may advise on suitable fixing methods, but these are outside the scope of this Certificate.

4.11 The designer should select a construction appropriate to the local wind-driven rain index, paying due regard to the design detailing, workmanship and materials to be used.

4.12 It is essential that this system is installed and maintained in accordance with the conditions set out in this Certificate.

5 Practicability of installation

The system should be installed only by specialised contractors who have successfully undergone training and registration by the Certificate holder.

Note: The BBA operates a UKAS Accredited Approved Installer Scheme for external wall insulation; details of approved installer companies are included on the BBA's website (www.bbacerts.co.uk).

6 Thermal performance

6.1 Calculations of thermal transmittance (U value) should be carried out in accordance with BS EN ISO 6946 : 2007, BS EN ISO 10211 : 2007 and BRE Report BR 443 : 2006, using the thermal conductivity (λ_D *value*) of the insulation materials given in Table 2.

Table 2 Insulation thermal conductivity

Insulation	Thickness (mm)	λ_D *value* ($W \cdot m^{-1} \cdot K^{-1}$)
Enhanced EPS (Grey)	50 to 200	0.032
Phenolic	15 to 24	0.023
	25 to 44	0.021
	45 to 200	0.020
PIR	⩽ 79	0.026
	80 to 119	0.025
	120 to 200	0.024

6.2 The U value of a completed wall will depend on the insulation type and thickness and fixing method, the type and number of fixings, and the insulating value of the substrate masonry and its internal finish. Calculated U values for sample constructions in accordance with the national Building Regulations are given in Table 3, and are based on the thermal conductivities given in Table 2.

Table 3 Insulation thickness required to achieve design U values[1][2][3] using galvanized steel fixings

U value ($Wm^{-2}·K^{-1}$)	Thickness of insulation (mm)					
	215 brickwork λ = 0.56 $W·m^{-1}·K^{-1}$			200 dense blockwork λ = 1.75 $W·m^{-1}·K^{-1}$		
	Grey EPS	Phenolic	PIR	Grey EPS	Phenolic	PIR
0.18	190	120	150	200	—[4]	150
0.19	180	115	140	190	115	140
0.25	130	85	100	140	85	110
0.26	120	75	100	130	85	100
0.28	110	75	90	120	75	90
0.30	100	65	80	110	75	90
0.35	80	55	70	90	55	80

(1) Wall construction inclusive of 13 mm plaster (λ = 0.57 $W·m^{-1}·K^{-1}$), brickwork (protected) with 17.1% mortar or dense blockwork with 6.7% mortar (λ = 0.88 $W·m^{-1}·K^{-1}$). Declared thermal conductivity of insulation values λ_D is as shown in Table 2. A board emissivity of 0.9, together with an external render thickness of 5 mm (with λ = 1 $W·m^{-1}·K^{-1}$).

(2) Calculations include included eight galvanized steel fixings per square metre with a point thermal transmittance (X_p) of 0.004 $W·K^{-1}$ per steel pin. Use of other types of fixings should be calculated in accordance with BS EN ISO 6946 : 2007. A gap correction of zero is assumed.

(3) Based upon an incremental insulation thickness of 10 mm.

(4) See section 4.2.

6.3 The system can contribute to maintaining continuity of thermal insulation at junctions between walls and other elements. For Accredited Construction Details the corresponding ψ-values (Psi) in BRE Information Paper IP 1/06, Table 3, may be used in carbon emission calculations in Scotland and Northern Ireland. Detailed guidance can be found in the documents supporting the national Building Regulations.

7 Strength and stability

General

7.1 The Certificate holder is ultimately responsible for the design of the system and it is the responsibility of the company installing the system to accurately follow the installation instructions (see also section 5 of this Certificate). The Certificate holder must also verify that a suitably experienced and qualified individual (with adequate professional indemnity) establishes that:

- the wind loads on the different zones of the building's elevation for the specific geographical location have been calculated correctly (see section 7.3)
- the system can adequately resist and safely transfer the calculated loads, accounting for all possible failure modes, to the substrate wall and supporting structure (see sections 7.3 to 7.6).

7.2 The substrate and supporting structure must be capable of transferring all additional loading due to the installation of system to the ground in a satisfactory manner. The adequacy of the substrate and supporting structure must be verified by the person or party responsible for the global stability of the building to which the system is applied. Any defects should be made good prior to the system being installed.

7.3 The wind loads on the walls should be calculated, taking into account all relevant factors such as location and topography, in accordance with BS EN 1991-1-4 : 2005 and its UK National Annex. All of the factors affecting wind load on each elevation and specific zone of the building must be considered. In accordance with BS EN 1990 : 2002 and its UK National Annex, a partial factor of 1.5 must be applied to the calculated characteristic wind pressure values to establish the design wind load to be resisted by the system.

7.4 Installations correctly designed in accordance with this Certificate will safely accommodate the applied loads due to the self-weight of the system, wind and impact.

7.5 Positive wind load is transferred to the substrate wall directly via compression through the render and insulation system.

7.6 Negative wind load is transferred to the substrate wall via[1][2]:

- the bond between the insulation and render system (see section 7.7)
- the pull-out resistance of the fixing from the substrate wall (see section 7.8)
- the pull-through resistance of the fixing (see section 7.9).

(1) For mechanically fixed systems with supplementary adhesive, the contribution of the adhesive is not considered when calculating resistance to wind load.

(2) Further guidance is available from BBA Guidance Note 1, available on the BBA website (www.bbacerts.co.uk).

7.7 The characteristic bond resistance between the insulation and render interface derived from test results was 87 kN·m^{-2} for EPS, 47 kN·m^{-2} for phenolic and 80 kN·m^{-2} for PIR insulations. The design resistance of the bond between the insulation and render (N_{RD1}) should be taken as the characteristic bond resistance divided by a partial factor of 9.

7.8 Typical characteristic pull-out resistances for the fixings taken from the corresponding European Technical Assessment (ETA) are given in Table 4; the values are dependent on the fixing type and must be selected to suit the specific loads and substrate concerned. In situations where suitable data does not exist[1], the characteristic pull-out resistance must be established from site-specific pull-out tests conducted on the substrate of the building to ascertain the minimum resistance to pull-out failure of the fixings, and determined in accordance with the guidance given in EOTA TR051 (minimum test characteristic value = 0.6 x mean of 5 lowest test results). To obtain the design pull-out resistance of the fixings (N_{RD2}), this characteristic pull-out resistance should then be divided by the partial factor given in Table 4.

(1) To qualify as suitable data, the age and condition of the substrate must be equivalent to that used to establish the values in the ETA.

Table 4 Fixings — typical characteristic pull-out resistances

Fixing Type	ETA number	Substrate	Drill diameter (mm)	Effective anchorage depth (mm)	Characteristic pull-out resistance (kN)[1]	Partial factor
Ejotherm NT U	05/0009	Concrete C12/15 Clay bricks	8	25	1.2 1.5	2
Ejotherm STR U	04/0023	Concrete C12/15 Clay bricks	8	25	1.5	2

(1) Values are determined in accordance with EAD 330196-00-0604 : 2016 and are dependent on the substrate. The Use Categories are defined in the corresponding ETA.

7.9 The characteristic pull-through resistance of the fixings was determined from tests using a 60 mm diameter fixing plate and minimum insulation thickness of 60 mm. The design resistance per fixing (N_{RD3}) is obtained by applying an appropriate partial factor as shown in Table 5.

Table 5 Design pull-through resistances

Factor (unit)	Phenolic	PIR	EPS
	Pull through		
Tensile resistance of the insulation (kN·m^{-2})	≥ 50	≥ 80	≥ 100
Fixing type[1]	Ejotherm NT U and STR U		
Fixing plate diameter (mm)	60		
Fixing plate stiffness (kN·mm^{-2})	≥ 0.6		
Fixing plate load resistance (KN)	≥ 2.08		
Insulation thickness (mm)	≥ 60		
Characteristic pull-through resistance[2] per fixing (kN)	At panel 0.628	At panel 0.649	At panel 0.495
Partial factor[3]	2.5		
Design pull-through resistance per fixing (N_{RD3}) (kN)	At panel 0.251	At panel 0.260	At panel 0.198
Design pull-through resistance per board (kN) (based on minimum number of fixings)[4]	1.255	1.3	0.99
Design pull-through resistance per board (kN) (based on maximum number of fixings)[5]	3.012	3.12	2.376

(1) See Table 4 for typical characteristic pull-out resistance of the fixings.

(2) Characteristic pull-through resistance of insulation over the head of the fixing, in accordance with BS EN 1990 : 2002, Annex D7.2 and its UK National Annex.

(3) The partial factor is based on the assumption that all insulation boards are quality controlled and tested to establish tensile strength perpendicular to the face of the board.

(4) The minimum design pull through resistance per board is based on a minimum of 5 fixings per board (1200 x 600 mm), which equates to approximately 7 fixings per m^2. The design resistance for the minimum number of fixings is based on the fixing pattern provided in Figure 4 of this Certificate and minimum insulation thickness specified in Table 5. The fixing pattern and interaction of the fixings should be considered when calculating the design resistance per board.

(5) The maximum design pull through resistance per board is based on a maximum of 12 fixings per board (1200 x 600 mm) which equates to approximately 17 fixings per m^2. The design resistance for the maximum number of fixings is only applicable to the minimum insulation thickness tested and as specified in Table 5. The fixing pattern, insulation thickness and interaction of the fixings should be considered when calculating the design resistance per board.

7.10 The number and spacing of the fixings should be determined by the Certificate holder. The number of fixings must not be less than the minimum specified for the system and the fixings should be symmetrically positioned and evenly distributed about the centre of the board both vertically and horizontally except at openings and building corners.

7.11 Dry-fixed installations correctly designed in accordance with this Certificate will safely accommodate the applied loads due to the self-weight of the system, wind and impact when using insulation with a maximum thickness of 200 mm. Any render system and fixings should be fitted as described in section 1.1 of this Certificate.

7.12 The data obtained from sections 7.7 to 7.11 must be assessed against the design wind load and the following expression must be satisfied:

For safe design:

$Rd \geq W_e$

$Rd_{b.ins/rend} = A_r * N_{RD1}$

$Rd_{pull\text{-}out} = n * N_{RD2}$

$Rd_{pull\text{-}through} = (N_{RD3panel} * n_{panel}) + (N_{RD3joint} * n_{joint})/A_{board}$

Where:

Rd	is the design ultimate resistance ($kN \cdot m^{-2}$) taken as the minimum of $Rd_{b.ins/rend}$, $Rd_{pull\text{-}out}$ and $Rd_{pull\text{-}through}$
W_e	is the maximum design wind load ($kN \cdot m^{-2}$)
$Rd_{b.ins/rend}$	is the design bond resistance between the insulation and render ($kN \cdot m^{-2}$)
$Rd_{pull\text{-}out}$	is the design pull-out resistance of the insulation fixings per metre square ($kN \cdot m^{-2}$)
$Rd_{pull\text{-}through}$	is the design pull-through resistance of the insulation fixings per metre square ($kN \cdot m^{-2}$)
A_r	is the reinforced basecoat bond area (based on % area covered)
N_{RD1}	is the design adhesive bond resistance between the insulation and render, based on test ($kN \cdot m^{-2}$)
N	is the number of anchor fixings per m^2
N_{RD2}	is the design pull-out resistance per fixing based on test (kN)
$N_{RD3panel}$	is the design pull-through resistance per anchor not placed at the panel joint, based on test (kN)
$N_{RD3joint}$	is the design pull-through resistance per anchor placed at the panel joint, based on test (kN)
n_{panel}	is the number of internal anchors in a panel
n_{joint}	is the number of joint anchors in a panel
A_{board}	is the area of the board (m^2)

7.13 The insulation system is mechanically fixed to the substrate wall with a minimum of 5 fixings per board or approximately 7 fixings per square metre, as per the fixing patterns shown in Figure 4, and in conjunction with a minimum 40% coverage of supplementary adhesive when using phenolic insulation (see section 16 of this Certificate). Additional fixings may be required, depending on the results of the calculations detailed above for the specific site.

Impact resistance

7.14 Hard body impact tests were carried out in accordance with ETAG 004 : 2013. The system is suitable for use in Categories II and III(1).

(1) The Use Categories are defined in ETAG 004 : 2013 as:

- Category I — a zone readily accessible at ground level to the public and vulnerable to hard body impacts but not subjected to abnormally rough use
- Category II — a zone liable to impacts from thrown or kicked objects, but in public locations where the height of the system will limit the size of the impact; or at lower levels where access to the building is primarily to those with some incentive to exercise care
- Category III — a zone not likely to be damaged by normal impacts caused by people or by thrown or kicked objects.

8 Behaviour in relation to fire

8.1 The reaction to fire classification of the system is B-s1, d0 in accordance with BS EN 13501-1: 2007.

8.2 The fire classification applies to the full range of insulation thicknesses covered by this Certificate.

8.3 The classification applies to the full range of colours and finishes (including render) covered by this Certificate.

8.4 The insulation materials in isolation are not classified as non-combustible.

8.5 In England, Wales and Northern Ireland, the system is restricted for use in buildings up to 18 m in height.

8.6 In England, Wales and Northern Ireland, the system is not classified as 'non-combustible' or 'of limited combustibility' and may be used on buildings at any proximity to a boundary.

8.7 In Scotland, the system is not classified as 'non-combustible' and may be used on buildings more than 1 m from a boundary and, on houses, 1 m or less from a boundary. With minor exceptions, the system should be included in calculations of unprotected area, except on houses where the external wall behind has the appropriate fire resistance.

8.8 In Scotland, the system should not be used on any building with a storey more than 11 m above the ground, or on any entertainment or assembly building with a total storey area more than 500 m^2, or on any hospital or residential care building with a total storey area more than 200 m^2.

8.9 For application to second storey walls and above, it is recommended that the designer considers at least one stainless steel fixing per square metre, and fire barriers in line with compartment walls and floors as advised in BRE Report BR 135 : 2013 (see Figure 2 of this Certificate).

Figure 2 Fire barrier

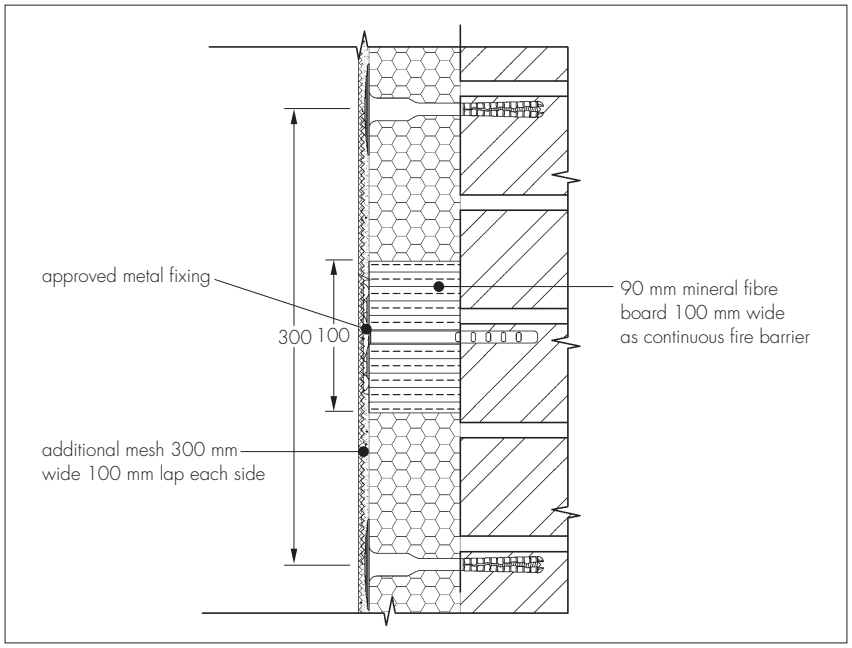

9 Proximity of flues

When the systems are installed in close proximity to certain flue pipes the relevant provisions of the national Building Regulations should be met:

England and Wales — Approved Document J

Scotland — Mandatory Standard 3.19, clause 3.19.4[1][2]

(1) Technical Handbook (Domestic).

(2) Technical Handbook (Non-Domestic).

Northern Ireland — Technical Booklet L.

10 Water resistance

10.1 The system will provide a degree of protection against rain ingress. However, care should be taken to ensure that walls are adequately weathertight prior to its application. The insulation system must only be installed where there are no signs of dampness on the inner surface of the substrate other than those caused solely by condensation.

10.2 Designers and installers should take particular care in detailing around openings, penetrations and movement joints to minimise the risk of rain ingress. Only details approved by the Certificate holder should be used.

10.3 The guidance given in BRE Report BR 262 : 2002 should be followed in connection with the weathertightness of solid wall constructions. The designer should select a construction appropriate to the local wind-driven index, paying due regard to the design detailing, workmanship and materials to be used.

10.4 At the tops of walls, the system should be protected by an adequate overhang or other detail designed for use with the type of system.

11 Risk of condensation

11.1 Designers must ensure that an appropriate condensation risk analysis has been carried out for all parts of the construction, including openings and penetrations at junctions between the insulation system to minimise the risk of condensation. The recommendations of BS 5250 : 2011 should be followed.

Surface condensation

11.2 Walls will adequately limit the risk of surface condensation when the thermal transmittance (U value) does not exceed 0.7 $W \cdot m^{-2} \cdot K^{-1}$ at any point and the junctions with other elements and openings comply with section 6.3 of this Certificate.

11.3 Walls will adequately limit the risk of surface condensation when the thermal transmittance (U value) does not exceed 1.2 $W \cdot m^{-2} \cdot K^{-1}$ at any point. Guidance may be obtained from BS 5250 : 2011, Section 8 and Annex D, and BRE Report BR 262 : 2002.

Interstitial condensation

11.4 Walls incorporating the systems will adequately limit the risk of interstitial condensation when they are designed and constructed in accordance with BS 5250 : 2011 (Section 4, Annexes D and G).

11.5 The water vapour resistance (μ) (for the insulation boards) and equivalent air layer thickness (S_d) (for the render systems) are shown in Table 6.

Table 6 Water vapour resistance factor (μ) and equivalent air layer thickness (S_d)

Description	S_d (m)	μ
Grey EPS insulation boards	—	(20-70)[1]
Phenolic insulation boards	—	50
PIR insulation boards	—	60
Structherm Silicone Decorative Render	0.34[2]	—
Structherm Dash Receiver + Dash Aggregate	1.0	—
Structherm Brick-effect Render finish	0.20[2]	—
Structherm Acrylic Brick-slips	0.19[2]	—

(1) It is recommended that the lower figure is used when assessing the interstitial condensation risk.
(2) Obtained from test on basecoat, primer and render finish together.

12 Maintenance and repair

12.1 Regular checks should be made on the installed systems, including:

- visual inspection of the render for signs of damage. Cracks in the render exceeding 0.2 mm must be repaired
- visual inspection of the acrylic brick-slips for signs of disbondment. Dislodged slips should be re-fixed using the acrylic brick-slip adhesive
- examination of the sealant around openings and service entry points
- visual inspection of architectural details designed to shed water to confirm that they are performing properly
- visual inspection to ensure that water is not leaking from external downpipes or gutters; such leakage could penetrate the rendering
- necessary repairs effected immediately and the sealant joints at window and door frames replaced at regular intervals
- maintenance schedules, which should include the replacement and resealing of joints, for example between the insulation systems and window and door frame.

12.2 Damaged areas must be repaired using the appropriate components and procedures detailed in the Certificate holder's installation instructions and in accordance with BS EN 13914-1 : 2005.

13 Durability

13.1 The system will remain effective for at least 30-years provided any damage to the surface finish is repaired immediately and regular maintenance is undertaken, as described in section 12.

13.2 Any render containing Portland cement may be subject to lime bloom. The occurrence of this may be reduced by avoiding application in adverse weather conditions. The effect is transient and is less noticeable on lighter colours.

13.3 The render may become discoloured with time, the rate depending on the initial colour, the degree of exposure and atmospheric pollution, as well as the design and detailing of the wall. In common with traditional renders, discoloration by algae and lichens may occur in wet areas. The appearance may be restored by a suitable power wash or, if required, by over coating.

13.4 To maintain a high quality aesthetic appearance, it may be necessary to periodically overcoat the building using a system compatible coating recommended by the Certificate holder and in accordance with BS EN 1062-1 : 2004. Care should be taken not to adversely affect the water vapour transmission or fire characteristics of the system. The advice of the Certificate holder should be sought as to the suitability of a particular product.

14 Site survey and preliminary work

14.1 A pre-installation survey of the property must be carried out to determine suitability for treatment and any repairs necessary to the building structure undertaken before application of the Structherm Thermaphon NSC2 External Wall Insulation System. A specification is prepared for each elevation of the building indicating:

- position of starter tracks and beads
- additional rigid (corner) mesh at corners of openings
- detailing around windows, doors and at eaves
- damp-proof course (dpc) level
- location and type of weather seals to be used and location of water deflection channels
- areas where flexible sealants must be used
- position of fire barriers.

14.2 The survey should include tests conducted on the walls of the building by the Certificate holder or their approved installers (see section 15) to determine the pull-out resistance of the proposed mechanical fixings. An assessment and recommendation is made on the type and number of fixings required to withstand the building's expected wind loading based on calculations using the relevant wind speed data for the site and the pull-out resistance (see section 7).

14.3 All necessary repairs to the building structure must be completed before installation of the system commences.

14.4 Surfaces should be sound, clean and free from loose material. The flatness of surfaces must be checked; this may be achieved using a straight edge spanning the storey height. Any excessive irregularities, ie greater than 10 mm, must be made good prior to installation to ensure that the insulation boards are installed with a smooth, in-plane finished surface.

14.5 Where surfaces are covered with an existing rendering it is essential that the bond between the background and the render is adequate. All loose areas should be hacked off and reinstated.

14.6 On existing buildings, purpose-made sills must be fitted to extend beyond the finished face of the systems. New buildings should incorporate suitably deep sills, designed to prevent water ingress and incorporating drips to shed water clear of the system.

14.7 Internal wet work, eg screeding or plastering, should be completed and allowed to dry prior to the application of a system.

15 Approved Installers

Application of the systems, within the context of this Certificate, must be carried out by approved installers recommended or recognised by the Certificate holder. Such an installer is a company:

- employing operatives who have been trained and approved by the Certificate holder to install the systems
- which has undertaken to comply with the Certificate holder's application procedure, containing the requirement for each application team to include at least one member operative trained by the Certificate holder
- subject to at least one inspection per annum by the Certificate holder to ensure suitable site practices are being employed. This may include unannounced site inspections.

16 Procedure

General

16.1 Installation of the system must be carried out in accordance with the Certificate holder's current installation instructions.

16.2 Weather conditions should be monitored to ensure correct application and curing conditions. Application of coating materials must not be carried out at temperatures below 5°C or above 30°C, if exposure to frost is likely or in damp/wet conditions The render must be protected from rapid drying.

16.3 All rendering should be in accordance with the relevant recommendations of BS EN 13914-1 : 2005.

Positioning and securing insulation boards

16.4 The base profile is secured to the external wall, line and level, above the dpc using the approved profile fixings at approximately 300 mm centres. Base rail connectors are inserted at all rail joints. Extension profiles are fixed to the front of the base rail or stop end channel where appropriate.

16.5 The phenolic insulation boards should be bonded to the wall using supplementary adhesive. The adhesive is prepared by mixing the contents of each 25 kg bag with 5 to 6 litres of clean water using a high power drill and mixer spiral to create a paste-like mortar, whilst ensuring there are no lumps in the mixed material. The boards are positioned on the starter track and bonded to the wall by applying the adhesive to the boards using the strip and dot method or full surface application using a 5 mm notched trowel. For the strip and dot method, a circumferential strip of adhesive at least 7.5 cm wide is applied to the boards. Three evenly distributed patches of adhesive 10 cm in diameter are then applied to the boards so that an adhesive surface of at least 40% is achieved. The insulation board should be immediately placed on the substrate and pressed into place.

16.6 The first run of insulation boards are positioned on the base profile. Holes are drilled into the substrate to the required depth through the insulation at the corners of each board and at positions which will allow a minimum of five fixings per insulation board (see Figure 3). Care must be taken to ensure that all insulation boards are butted tightly together, and alignment should be checked as work proceeds. Allowance should be made where either existing render is on the wall or dubbing-out render has been used to align the boards, as the effective embedment will be reduced.

Figure 3 Positioning of the boards

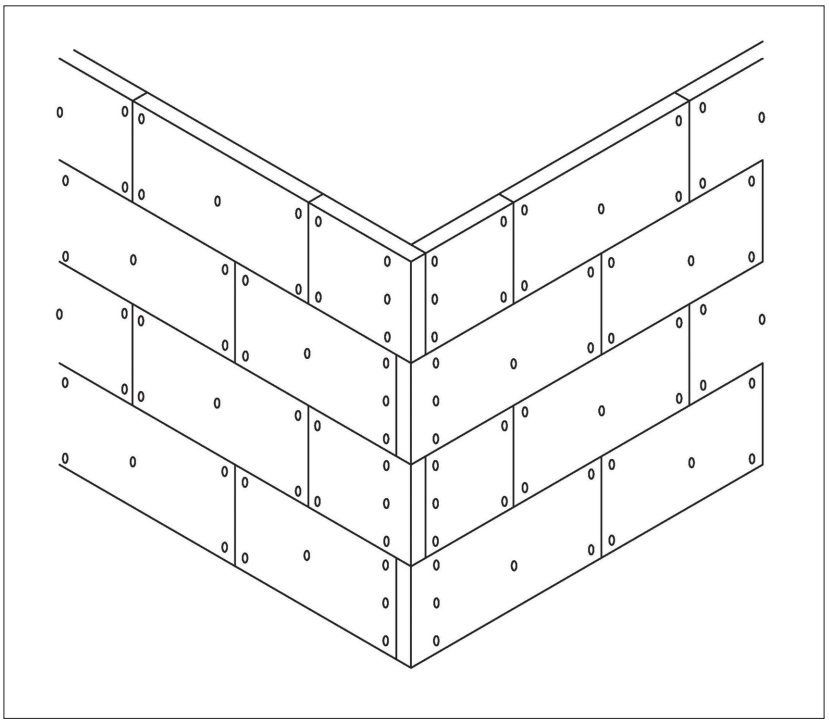

16.7 To fit around details such as doors and windows, insulation boards may be cut with a sharp knife or a fine-tooth saw. If required, purpose-made window sills are fitted (see Figure 9). They are designed to prevent water ingress and incorporate drips to shed water clear of the system.

16.8 The mechanical fixings are inserted through the insulation boards and tapped firmly into place, securing the insulation boards to the substrate using the approved fixing pattern which will allow for a nominal seven to eight fixings per square metre (see Figure 4). Around openings, additional fixings should be used at 300 mm centres. Subsequent rows of boards are positioned so that the vertical board joints are staggered and overlapped at the building corners and the slab joints do not occur within 200 mm of the corners of openings.

16.9 Installation continues until the whole wall is completely covered including, where appropriate, the building soffits and eaves.

Figure 4 Typical fixing pattern through insulation

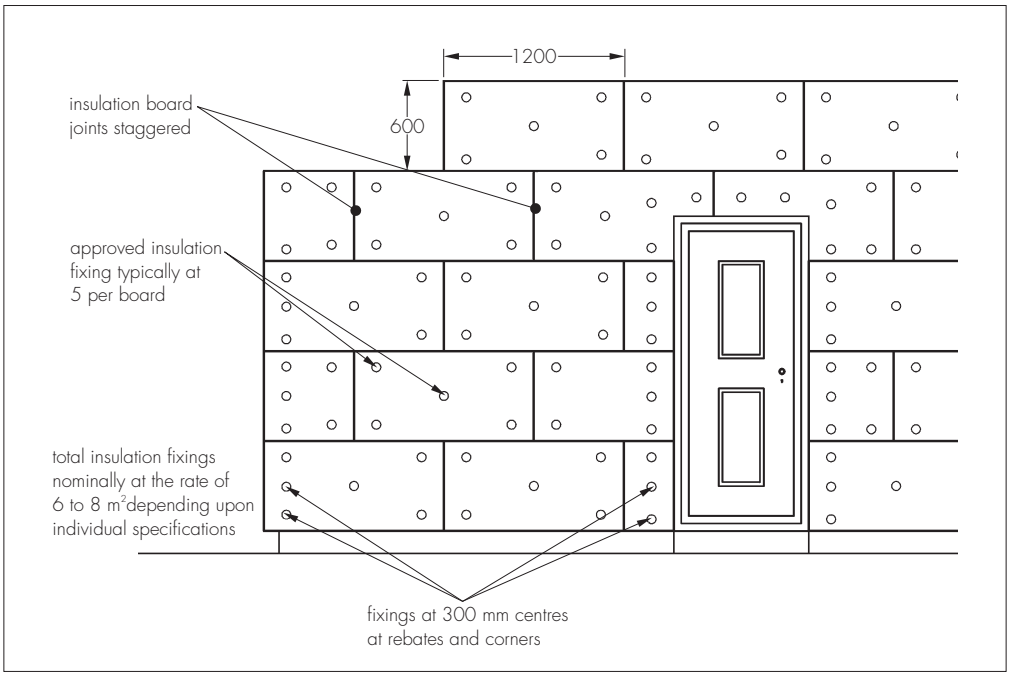

Movement joints and profiles

16.10 Movement joints in the substrate must be continued through the system. The joint detail using purpose-made trims is illustrated in Figure 5.

16.11 Expansion beads are fixed vertically in agreed positions. These beads are positioned at approximately seven metre centres along a building, the centres depending on the individual design and requirements of each job. The Certificate holder should be consulted for further information regarding provision for expansion in the system.

Figure 5 Vertical movement joint detail

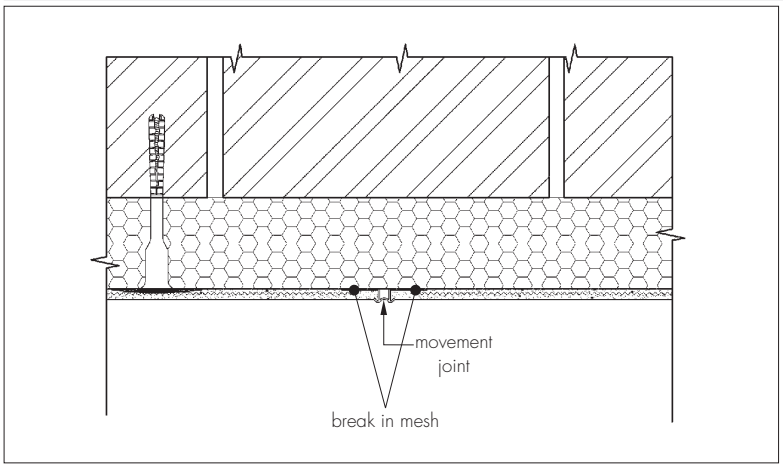

Reinforcing

16.12 The basecoat render is prepared by mixing the contents of each 25 kg bag with 4.5 to 5.0 litres of clean water using a suitable drill with a whisk attachment, for at least five minutes after the addition of the last bag of render (to allow an even dispersion of the resins) then allowed to stand for at least three minutes, then re-mixed. This allows the chemical additive to dissolve and reactivate.

16.13 The basecoat is applied by stainless steel trowel to the surface of the dry insulation to a minimum thickness of 3 mm. The mesh is bedded immediately into the basecoat, with 100 mm minimum overlap at joints, then an additional 3 mm basecoat is applied, to achieve an overall thickness of 6 mm. Additional pieces of reinforcing mesh (250 mm by 500 mm) are used diagonally at the corners of openings, as shown in Figure 6. Corner details are reinforced using the corner beads.

Figure 6 Additional reinforcement at openings

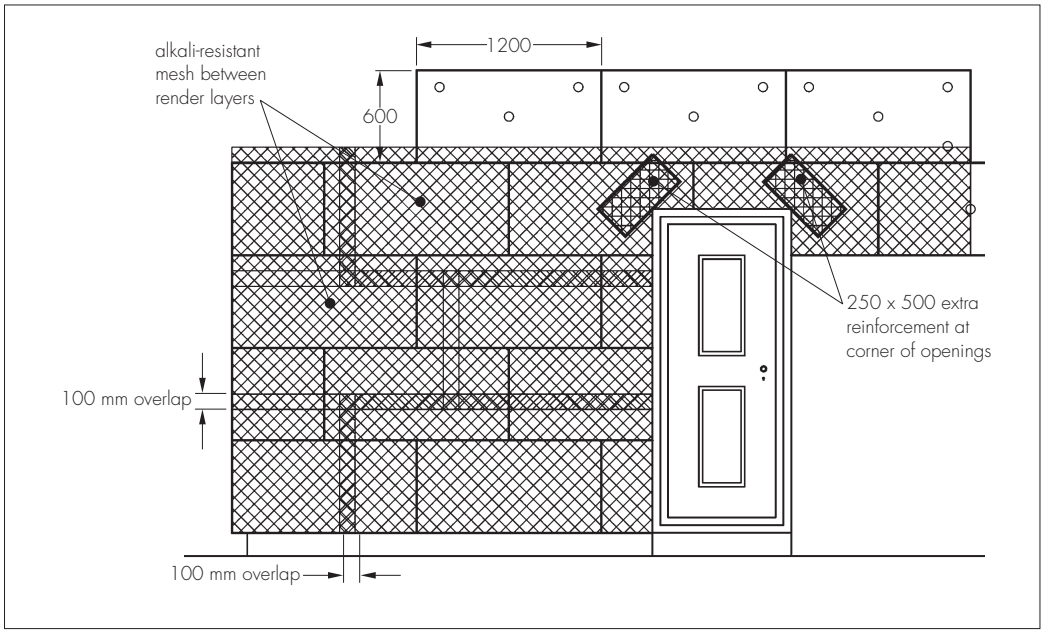

16.14 Prior to the render coat, a bead of silicone sealant is gun-applied at window and door frames, overhanging eaves, gas and electric meter boxes, wall vents or where the render abuts any other building material or surface.

16.15 Corner beads are fixed to all building corners and to door and window heads and jambs (see Figure 7).

Figure 7 External corner detail

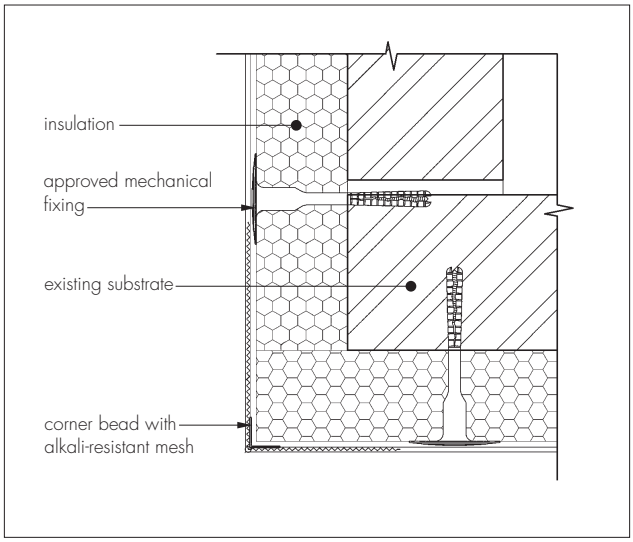

16.16 Stop beads are positioned vertically, eg at party wall positions where the adjoining property does not require treatment.

Rendering and finishing

Table 7 Thickness of finishes

Finish coat	Thickness range (mm)
Structherm Dash Receiver	6 to 8
Structherm Spar Dash Aggregate	6 to 8 chips
Structherm Silicone Decorative Render	1.0, 1.2, 1.5, 2.0
Structherm Acrylic Brick-slips	4.0
Structherm Acrylic Brick-slips adhesive	4 to 5
Structherm Brick-effect Render mortar coat facing coat	 6 to 8 3 to 6 (depending on brick joint depth required)

Silicone decorative finish

16.17 Silicone primer is applied by roller or brush at 0.2 kg·m^{-2} to 0.3 kg·m^{-2}. The primer must be allowed to dry before application of the finish coat.

16.18 Structherm Silicone Texture finish is supplied ready-to-use although a maximum of 2% potable water can be mixed into the 25 kg tub prior to application.

16.19 The finishes are applied to the thicknesses specified in Table 7, using a stainless steel trowel and finished with a plastic trowel to create a textured finish.

16.20 To prevent the finish from drying too rapidly, it should not be applied in direct sunlight and continuous surfaces should be completed without a break.

Dash receiver and spar aggregate

16.21 The dash receiver is prepared by mixing each 25 kg bag with 4.5 to 5.5 litres of clean water. The product is mixed thoroughly to the specified consistency.

16.22 Structherm Dash Receiver is applied to a depth of 6 mm, to achieve an even coat using straight edges and spatulas if necessary. A thicker coat of dash receiver may be necessary when using a larger aggregate size to ensure it fully beds into the dash receiver. While the render is still soft, selected clean spar aggregate is sprayed onto the surface.

16.22 Aggregates should be clean and damp before dashing onto the dash receiver.

16.24 On completion, the surface must be checked to ensure an even coverage of spar-dash has been achieved. Where necessary the aggregate should be lightly tamped to ensure that a good bond is achieved.

Brick-effect render finish

16.25 The Structherm Brick-effect Render should be mixed with 4 to 5 litres of potable water per 25 kg bag for a minimum of 5 minutes with an electric paddle mixer to disperse the additives.

16.26 The first (mortar) layer should be applied to the surface of the basecoat using a hawk and trowel or projection render machine to a minimum thickness of 6 mm and ruled off to a flat finish.

16.27 After the mortar layer has started to stiffen, the second layer (brick-face) is applied to the mortar layer following its initial stiffening to an average thickness of 3 mm to 6 mm, using a hawk and trowel, or projection render machine.

16.28 The brick face layer should be cut out to the required pattern after the face layer has been shaded and textured. The face layer is cut through completely and the mortar layer is cut into slightly using an appropriate bespoke cutting tool. This reproduces recessed mortar coursing of the brickwork as required.

16.29 Following further stiffening of the materials, any face materials left by the cutting out should be lightly brushed and removed using a soft bristled brush.

16.30 Allow to thoroughly dry out for 48 hours to 1 week depending on weather conditions.

Acrylic brick-slips

16.31 Acrylic Primer is applied by roller or brush. The primer is allowed to dry before application of the Acrylic Brick-slip Adhesive.

16.32 Structherm Acrylic Brick-slip Adhesive is applied by 5 mm notch trowel to entire surface of primed basecoat.

16.33 As brick-slips can be subject to shade variation, they should be selected at random from different boxes.

16.34 Structherm Acrylic Brick-slips are applied by hand in brick bond fashion, lined and levelled into adhesive. The brick-slips should be fully encapsulated in adhesive. During application, work should progress from top to bottom lines.

16.35 Joints are normally 10 mm (minimum) wide and when pointing a suitably sized brush is used to smooth out the adhesive into joints on brick-slips and left to dry.

All finishes

16.36 After application, care must be taken to protect the render/brick-slips from direct sunlight, drying winds, rain, mist and cold (less than 5°C on a falling thermometer) to prevent the drying time from being too rapid or excessively prolonged.

16.37 The decorative finish should not be applied in wet weather, at temperatures below 5°C or when frost is expected. Freshly coated work should be protected from rain (minimum of one week for brick-slips).

Detailing

16.38 Care must be taken in the detailing of the system around openings and projections (see Figures 8 and 9).

16.39 At the tops of walls, the system should be protected by an adequate overhang or by an adequately sealed, purpose-made flashing. Care should be taken in the detailing of the system around such features as openings, projections and at eaves to ensure adequate protection against water ingress and to limit the risk of water penetrating the systems (see Figure 10).

Figure 8 Window head details

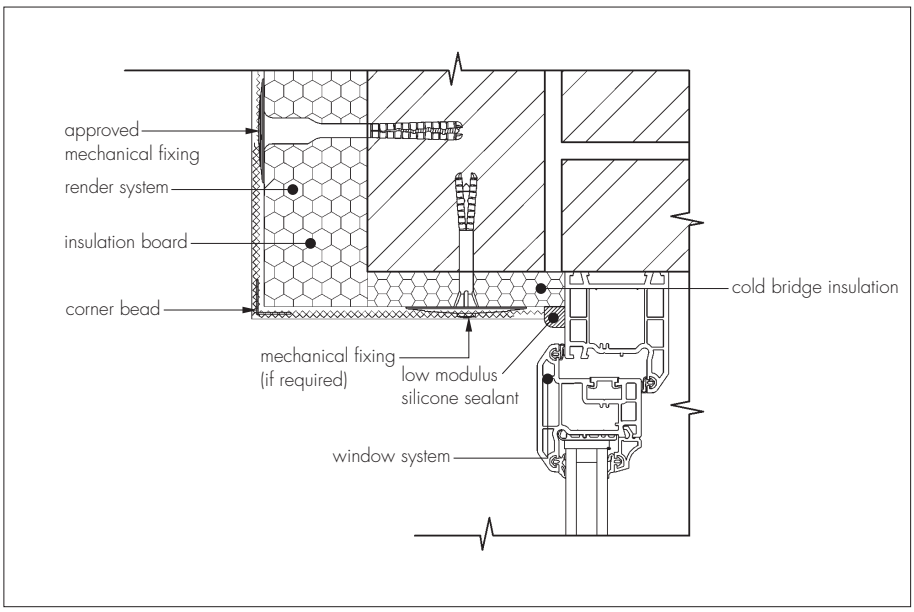

Figure 9 Typical window sill

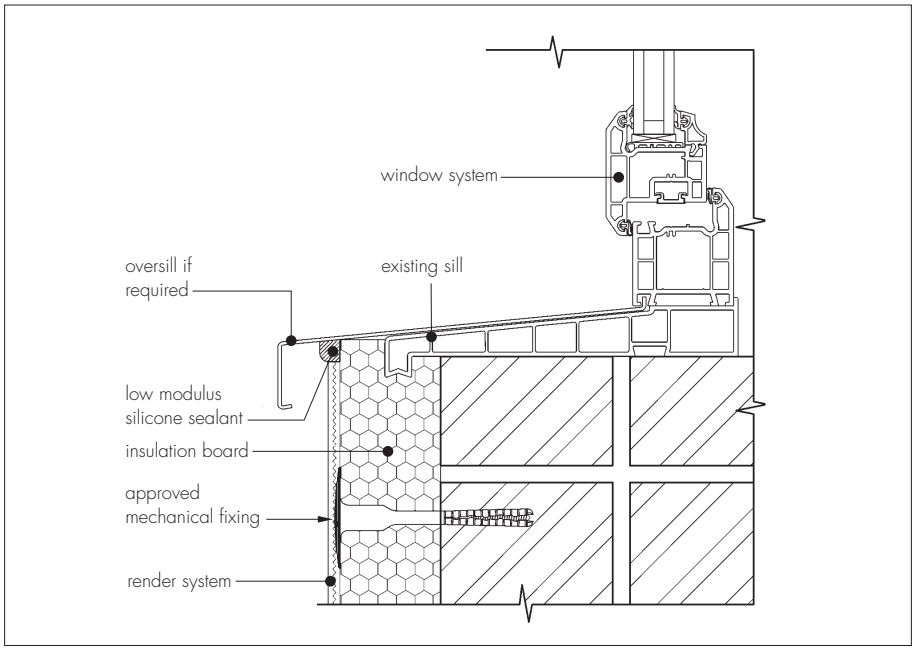

Figure 10 Typical eaves detail

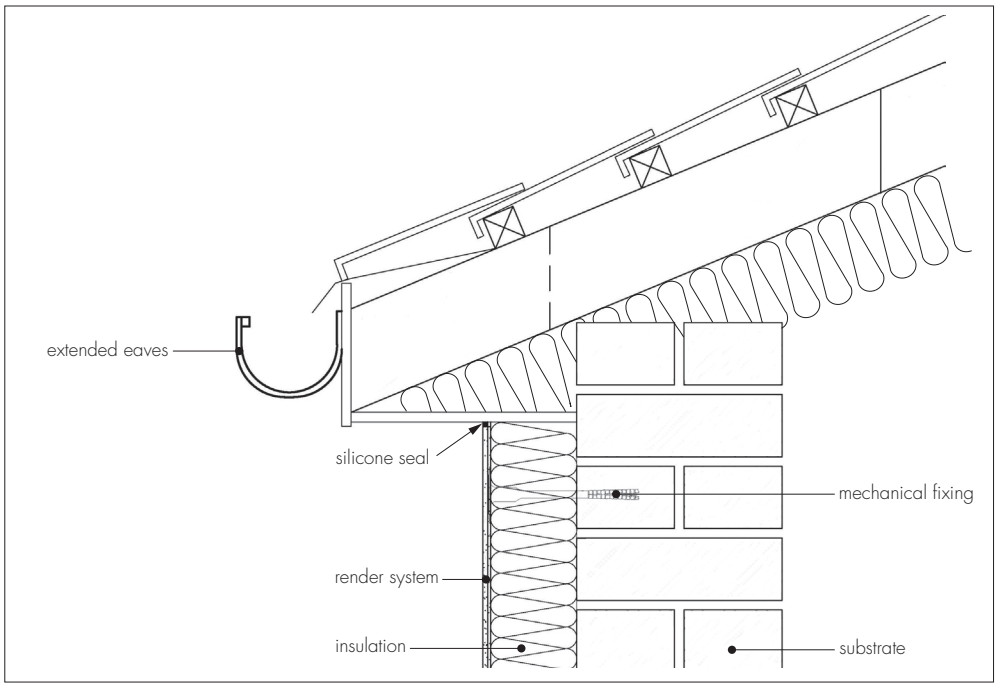

16.40 On completion, external fittings are re-fixed to the substrate using suitable fixing pads previously installed in the system, or a retrospective solution approved by the Certificate holder.

17 Tests

Tests were carried out on Structherm Thermaphon NSC2 External Wall Insulation System to determine:

- resistance to freeze/thaw
- heat/spray cycling
- impact resistance
- component characterisation
- water vapour permeability
- fire test to BS 476-6 : 1989 and BS 476-7 : 1987
- fire test to BS EN 13501-1 : 2007
- thermal conductivity to BS EN ISO 6946 : 2007
- bond strength

- durability of finish coatings
- tensile strength (perpendicular to faces) of grey EPS insulation.

18 Investigations

18.1 The manufacturing process was evaluated, including the methods adopted for quality control, and details were obtained of the quality and composition of materials used.

18.2 An assessment of the risk of interstitial condensation was undertaken.

18.3 The practicability of installation and the effectiveness of detailing techniques were examined.

Bibliography

BS 476-6 : 1989 *Fire tests on building materials and structures — Method of test for fire propagation for products*
BS 476-7 : 1987 *Fire tests on building materials and structures — Method for classification of the surface spread of flame of products*

BS 5250 : 2011 *Code of practice for control of condensation in buildings*

BS 8000-0 : 2014 *Workmanship on construction sites — Introduction and general principles*
BS 8000-2.2 : 1990 *Workmanship on building sites — Code of practice for concrete work — Sitework with in situ and precast concrete*
BS 8000-3 : 2001 *Workmanship on building sites — Codes of practice for masonry*

BS 13163 : 2012 *Thermal insulation products for buildings — Factory made expanded polystyrene (EPS) products — Specification*

BS EN 1062-1 : 2004 *Paints and varnishes — Coating materials and coating systems for exterior masonry and concrete — Classification*

BS EN 1990 : 2002 *Eurocode — Basis of structural design*
NA to BS EN 1990 : 2002 *UK National Annex for Eurocode. Basis of structural design*

BS EN 1991-1-4 : 2005 *Eurocode — Actions on structures — General actions — Wind actions*
NA to BS EN 1991-1-4 : 2005 *UK National Annex to Eurocode 1 : Actions on structures — General actions — Wind actions*

BS EN 1992-1-1 : 2004 + A1: 2014 *Eurocode 2: Design of concrete structures — General rules and rules for buildings*
NA + A2 :14 to BS EN 1992-1-1 :2004 + A1 : 2014 UK National Annex to *Eurocode 2 — Design of concrete structures — General rules and rules for buildings*

BS EN 1996-1-1 : 2005 + A1 : 2012 *Eurocode 6 — Design of masonry structures — General rules for reinforced and unreinforced masonry structures*
NA to BS EN 1996-1-1 : 2005 + A 1: 2012 UK National Annex to *Eurocode 6 — Design of masonry structures — General rules for reinforced and unreinforced masonry structures*
BS EN 1996-2 : 2006 *Eurocode 6 — Design of masonry structures — Design considerations, selection of materials and execution of masonry*

BS EN 13165 : 2012 *Thermal insulation products for buildings — Factory made rigid polyurethane foam (PU) products — Specification*

BS EN 13166 : 2012 *Thermal insulation products for buildings — Factory made phenolic foam (PF) products — Specification*

BS EN 13501-1 : 2007 *Fire classification of construction products and building elements — Classification using test data from reaction to fire tests*

BS EN 13914-1 : 2005 *Design, preparation and application of external rendering and internal plastering — External rendering*

BS EN ISO 6946 : 2007 *Building components and building elements — thermal resistance and thermal transmittance — calculation method*

BS EN ISO 10211 : 2007 *Thermal bridges in building construction — Heat flows and surface temperatures — Detailed calculations*

BRE Information Paper IP 1/06 *Assessing the effects of thermal bridging at junctions and around opening*

BRE Report (BR 135 : 2013) *Fire Performance of External Thermal Insulation for Walls of Multistorey Buildings*

BRE Report (BR 262 : 2002) *Thermal Insulation : avoiding risks*

BRE Report (BR 443 : 2006) *Conventions for U value calculations*

ETAG 004 : 2013 *External Thermal Insulation Composite Systems with Rendering*

19 Conditions

19.1 This Certificate:

- relates only to the product/system that is named and described on the front page
- is issued only to the company, firm, organisation or person named on the front page — no other company, firm, organisation or person may hold or claim that this Certificate has been issued to them
- is valid only within the UK
- has to be read, considered and used as a whole document — it may be misleading and will be incomplete to be selective
- is copyright of the BBA
- is subject to English Law.

19.2 Publications, documents, specifications, legislation, regulations, standards and the like referenced in this Certificate are those that were current and/or deemed relevant by the BBA at the date of issue or reissue of this Certificate.

19.3 This Certificate will remain valid for an unlimited period provided that the product/system and its manufacture and/or fabrication, including all related and relevant parts and processes thereof:

- are maintained at or above the levels which have been assessed and found to be satisfactory by the BBA
- continue to be checked as and when deemed appropriate by the BBA under arrangements that it will determine
- are reviewed by the BBA as and when it considers appropriate.

19.4 The BBA has used due skill, care and diligence in preparing this Certificate, but no warranty is provided.

19.5 In issuing this Certificate, the BBA is not responsible and is excluded from any liability to any company, firm, organisation or person, for any matters arising directly or indirectly from:

- the presence or absence of any patent, intellectual property or similar rights subsisting in the product/system or any other product/system
- the right of the Certificate holder to manufacture, supply, install, maintain or market the product/system
- actual installations of the product/system, including their nature, design, methods, performance, workmanship and maintenance
- any works and constructions in which the product/system is installed, including their nature, design, methods, performance, workmanship and maintenance
- any loss or damage, including personal injury, howsoever caused by the product/system, including its manufacture, supply, installation, use, maintenance and removal
- any claims by the manufacturer relating to CE marking.

19.6 Any information relating to the manufacture, supply, installation, use, maintenance and removal of this product/system which is contained or referred to in this Certificate is the minimum required to be met when the product/system is manufactured, supplied, installed, used, maintained and removed. It does not purport in any way to restate the requirements of the Health and Safety at Work etc. Act 1974, or of any other statutory, common law or other duty which may exist at the date of issue or reissue of this Certificate; nor is conformity with such information to be taken as satisfying the requirements of the 1974 Act or of any statutory, common law or other duty of care.

British Board of Agrément
Bucknalls Lane
Watford
Herts WD25 9BA
tel: 01923 665300
e-mail: clientservices@bbacerts.co.uk
website: www.bbacerts.co.uk
©2014